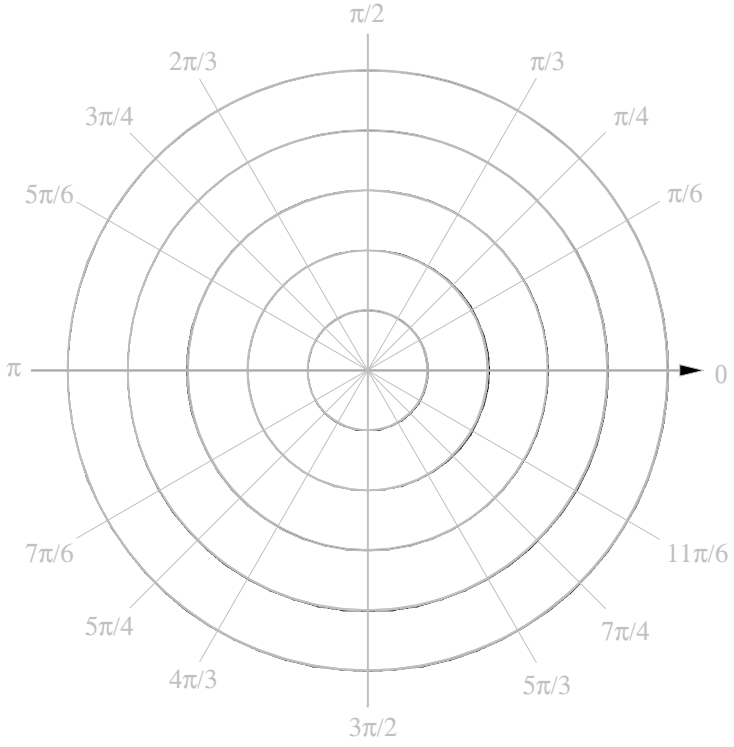
π/2
2π/3
π/3
3π/4
π/4
5π/6
π/6
π
0
7π/6
11π/6
5π/4
7π/4
4π/3
5π/3
3π/2

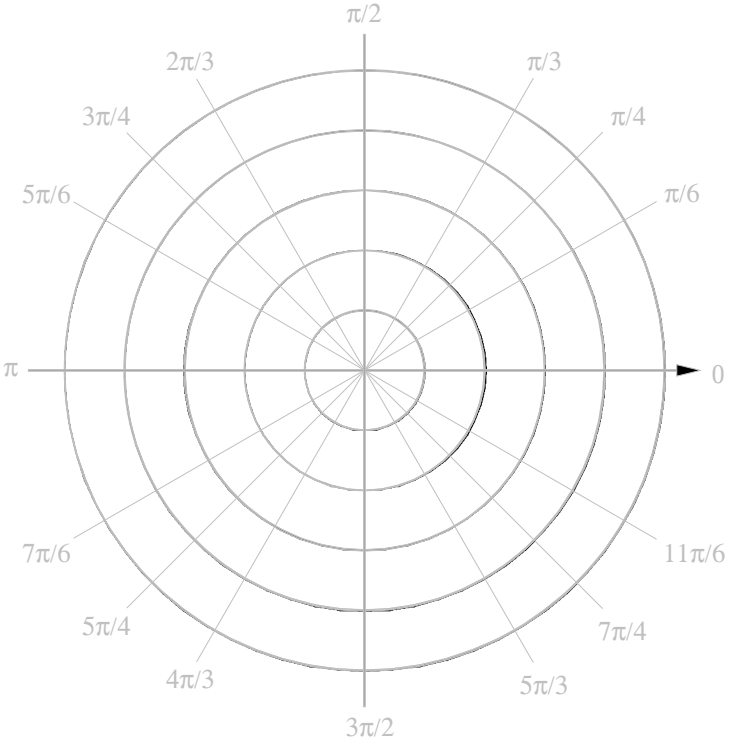
π/2
2π/3
π/3
3π/4
π/4
5π/6
π/6
π
0
7π/6
11π/6
5π/4
7π/4
4π/3
5π/3
3π/2

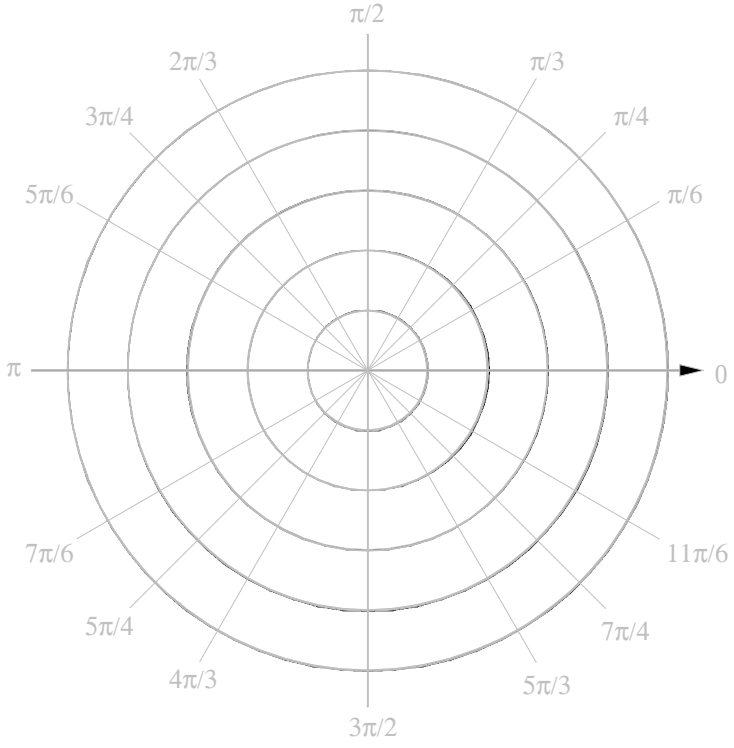
π/2
2π/3
π/3
3π/4
π/4
5π/6
π/6
π
0
7π/6
11π/6
5π/4
7π/4
4π/3
5π/3
3π/2

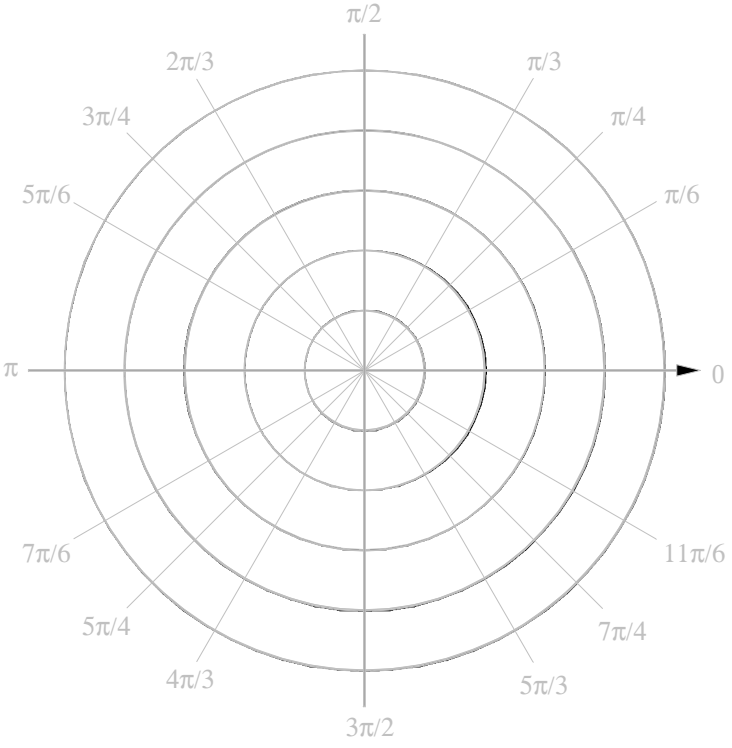
π/2
2π/3
π/3
3π/4
π/4
5π/6
π/6
π
0
7π/6
11π/6
5π/4
7π/4
4π/3
5π/3
3π/2